Type-C USB

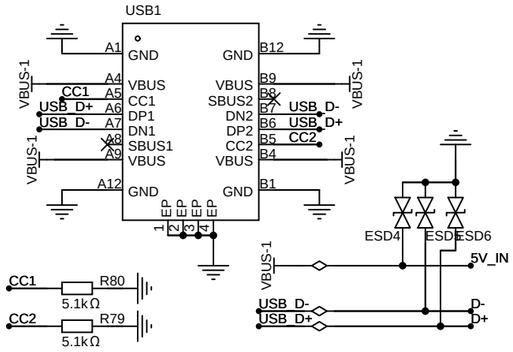

ESP32-C6 Module

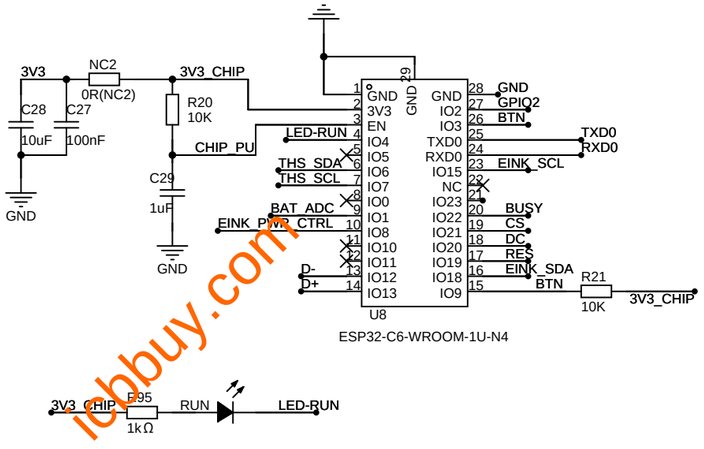

idbbuy.com

Lithium battery charging circuit

After power consumption testing, the lowest sleep current of the whole machine is about 22 μ A.
The actual number of network packets sent per day is between 15-24 times, and the 3.7V 350mAH lithium battery can theoretically be used for 4 months.
PCB has lithium battery charging circuit and lithium battery low voltage protection circuit,
When the battery is low, the lithium battery can be charged through the Type-C port.

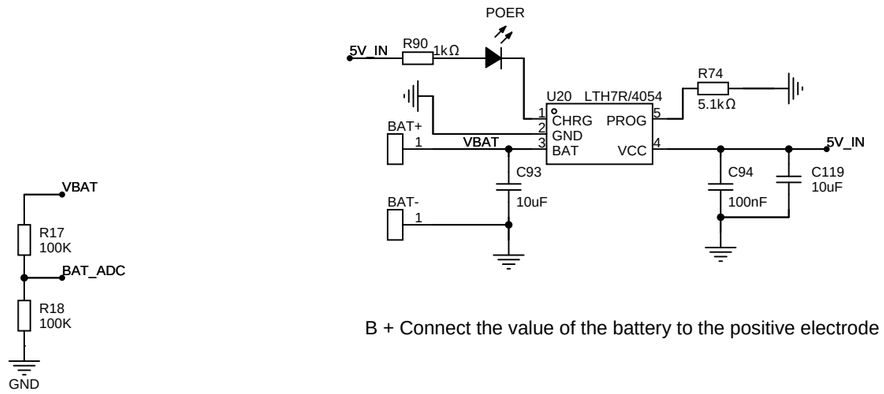

B + Connect the value of the battery to the positive electrode

Power management circuit

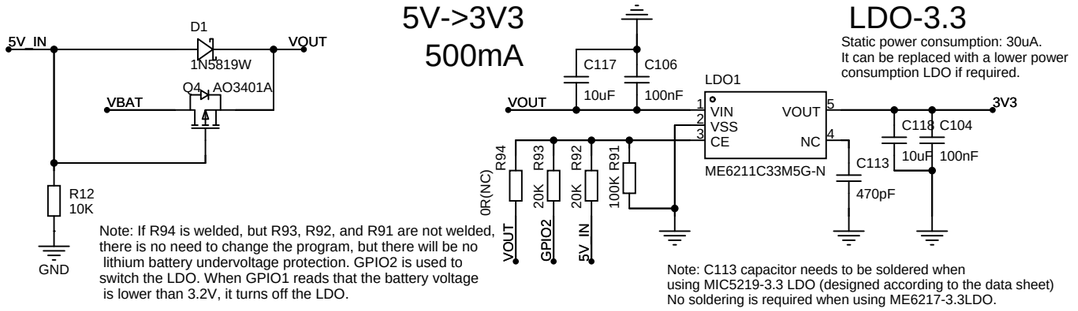

Note: If R94 is welded, but R93, R92, and R91 are not welded, there is no need to change the program, but there will be no lithium battery undervoltage protection. GPIO2 is used to switch the LDO. When GPIO1 reads that the battery voltage is lower than 3.2V, it turns off the LDO.

LDO-3.3

Static power consumption: 30uA.
It can be replaced with a lower power consumption LDO if required.

Note: C113 capacitor needs to be soldered when using MIC5219-3.3 LDO (designed according to the data sheet)
No soldering is required when using ME6217-3.3LDO.

DEBUG

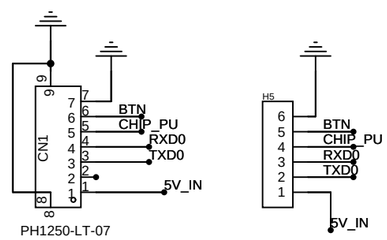

Button

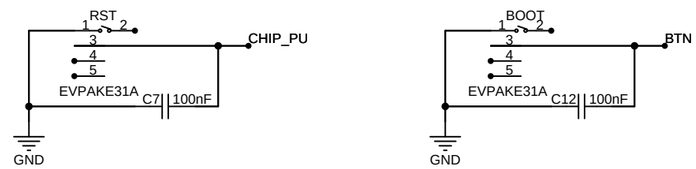

The system hardware has a certain low-power design,
and controls the power supply of the e-ink screen through a GPIO2.
When the main CPU Deep Sleep, the ink screen is powered off.
When the temperature and humidity data need to be updated,
The ink screen is refreshed when it is powered on,
and then powered off after the refresh is completed.

E-Paper

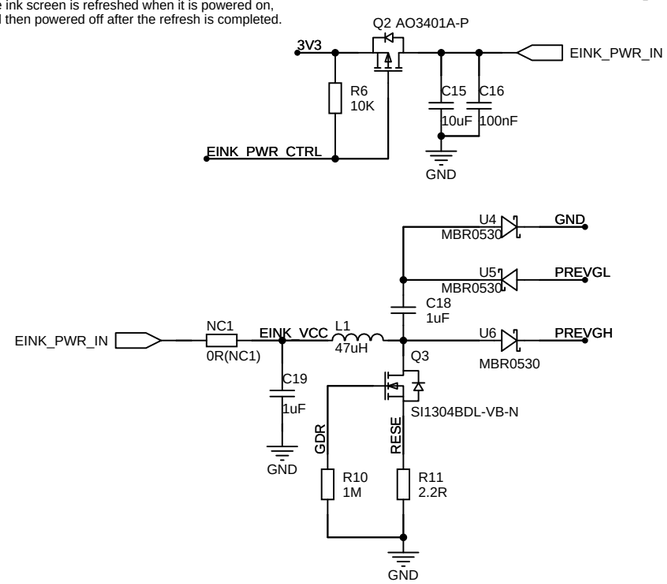

It should be noted that the latest PCB has lithium battery under-voltage protection.

When the battery voltage is lower than 3V, the LDO power supply is cut off.
This function is controlled through GPIO2 and does not affect the USB power supply.

However, when the USB is unplugged, GPIO2 needs to be pulled high to ensure LDO power supply. Friends who need to copy this project can add it to the code first.
The source code will be updated later.

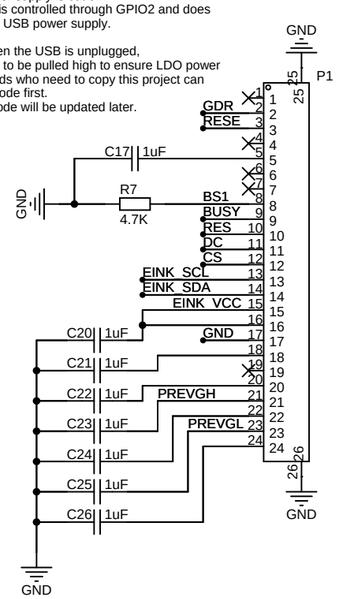

AHT21B Sensor

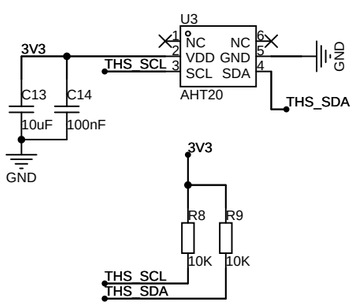

BMP280

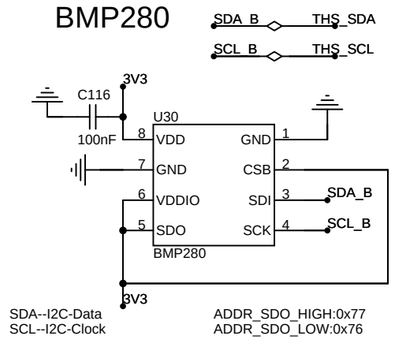

Item:	ESP32-C6_EPD2_2.9inch
Date:	2024/9/23
Version:	v1.1
Author:	JW